REVISIONS				
ZONE	REV	DESCRIPTION	DATE	APPROVED
	0	RELEASED PER ECO: 110001		
	1	ECO 110068: ADDED WELDING AT EACH DOOR UPPER CORNERS ADDED SECOND CUT OUT ON FLOOR, ITEM 21, NOTE 12	8/19/11	C.R.
	2	ECO 110087: EXTENDED THE SECOND CUT-OUT ON FLOOR ADD ITEMS 22, 23, ADD CUT-OUT AND HOLES FOR GROUND BAR	9/20/11	C.R.
G7 SHEET 1	3	ECO 110099: REVISED DISTANCE BETWEEN HOLES ADDED NOTE 13	10/12/11	C.R.

SECTION B-B

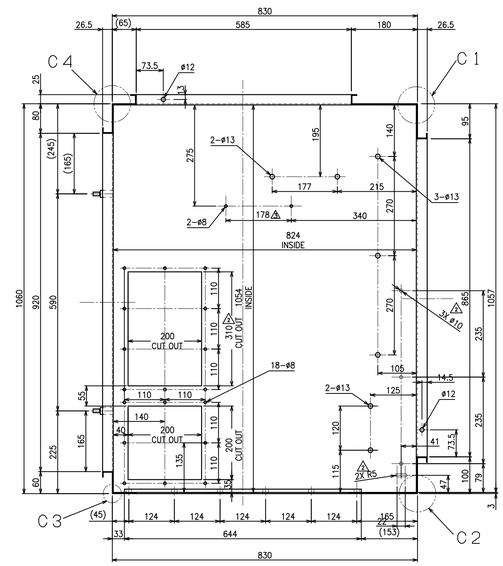

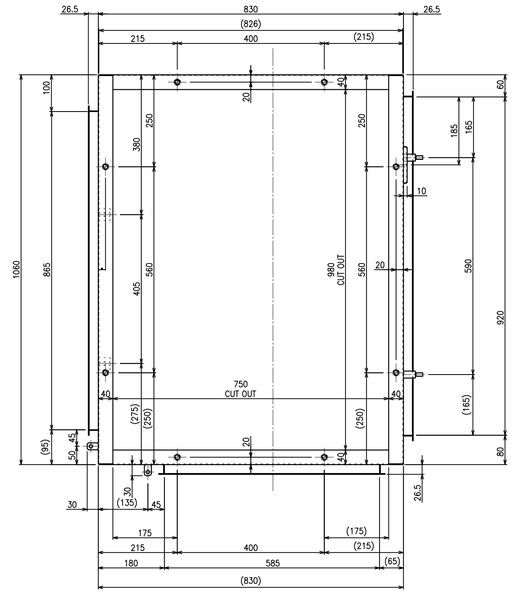

所有的外焊缝需做渗水试验

7-10项用M6不锈钢螺丝装配

这图可参考：

NOTES

1. DIMENSIONING UNITS: MM
2. MATERIAL(S): SEE MATERIAL SPEC. NEXT TO EACH ITEM
3. ALL INTERNAL BEND RADII AS NEDDED BY VENDOR
4. ALL EXTERNAL WELDED SEAMS ARE TO BE WATER PROOF
5. THIS DWG. HAS REFERENCES: 0BD05821 R0, 4BD07027 R0, 2BD13385 R0, 2BD13386 R0, 2BD14361 R0, 3BD17617 R0.
6. ITEMS 7, 8, 9, 10, TO BE INSTALLED BY M6 STAINLESS STEEL HARDWARE
7. ITEM 12 TO BE INSTALLED BY M12 BUTERFLY NUT ALUMINUM OR BRASS
8. ITEM 14 TO BE INSTALLED BY M10 STAINLESS HARDWARE
9. ITEMS 15, 16, TO BE INSTALLED BY M6 STAINLESS STEEL HARDWARE
10. ITEMS 17, 20, TO BE INSTALLED USING HINGES HVB PART# 12-0101-02 OR AEI STYLE (QTY=4) AND M8 STAINLESS STEEL HARDWARE
11. ON ITEM 17, 20, TO BE INSTALLED AEI STYLE HANDLE/LATCH SYSTEM (QTY=2) AND WINDOW/GASKET (QTY=1)
12. ITEM 21 (4BA69765) TO BE SUPPLYED BY AEI, QTY=2
13. CAULK ANY UN-WELDED JOINT INSIDE OF MECH. HOUSE

所有的内折半径按客户需要的定

17,20项需装美国能源局规定的把手，垫块

在柜子内非焊缝处不能漏水

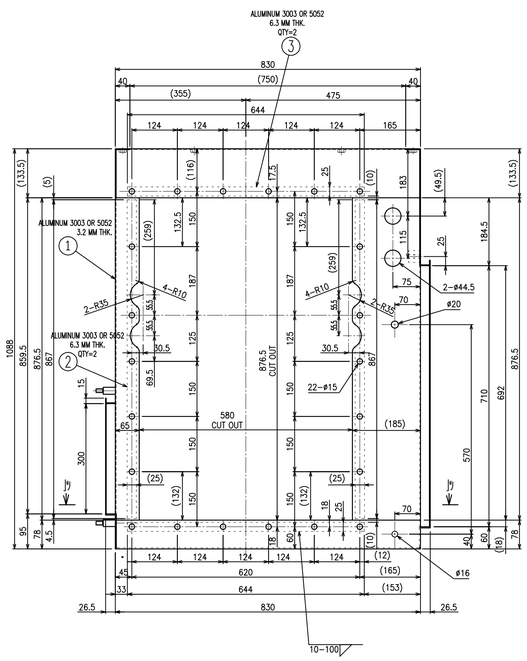

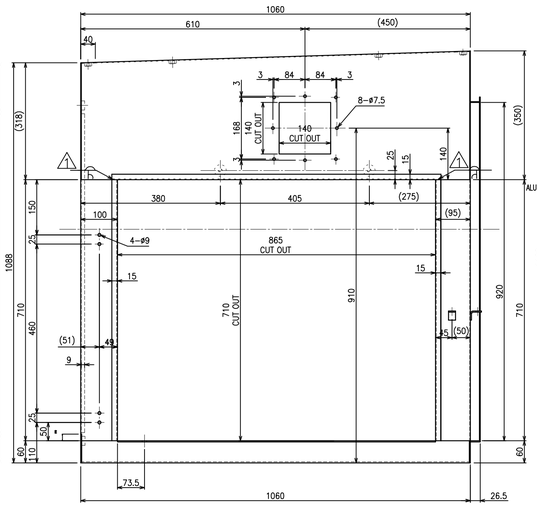

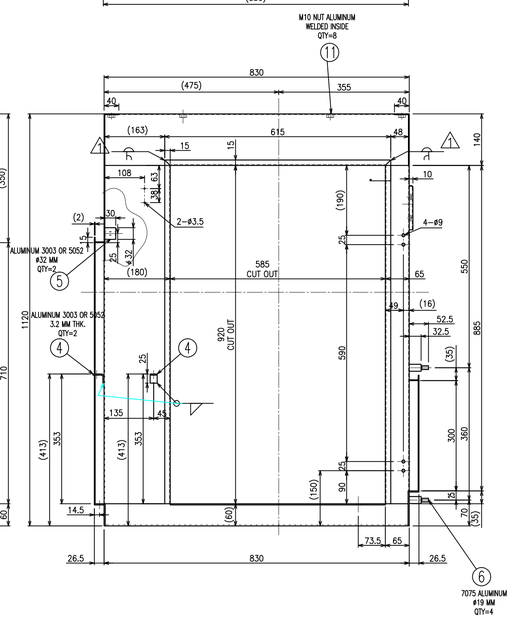

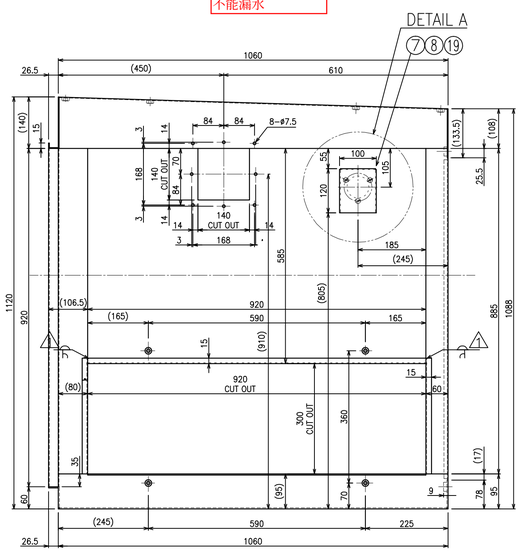

UNLESS OTHERWISE SPECIFIED DIMENSIONS ARE IN INCHES.
DO NOT SCALE DRAWING.
TOLERANCES:
.XX ± .015
.XXX ± .005
ANG. ± 1°

THIRD ANGLE PROJ.

CULLINAN

TITLE: ASSY, MECH HOUSE (ALUMINUM) 362 HHI

DRAWN BY: C. REIT	DATE: 1/21/2011	SIZE: D	FSCM NO.	DWG. NO. 40-5323-00	REV. 3
ENGRD BY:	DATE:	SCALE: 1:4	WEIGHT (LBS): N/A	CONT. ON SHT. 2	SHT NO. 1